Weight: g/pcs

RoHS Compliant

Technical requirements for plugs	
Connection Method	Threaded Connection
Wiring Method	Welding
Temperature Range	-40℃~80℃
Pollution Level	3
Protection Level	IP67(Locked State)
Plug and unplug lifespan	≥500
Rated Voltage	60V AC/DC
Rated Current	4.0A
Contact Resistance	≤5mΩ
Insulation Resistance	≥100MΩ
Quality Standard	IPC-A-620

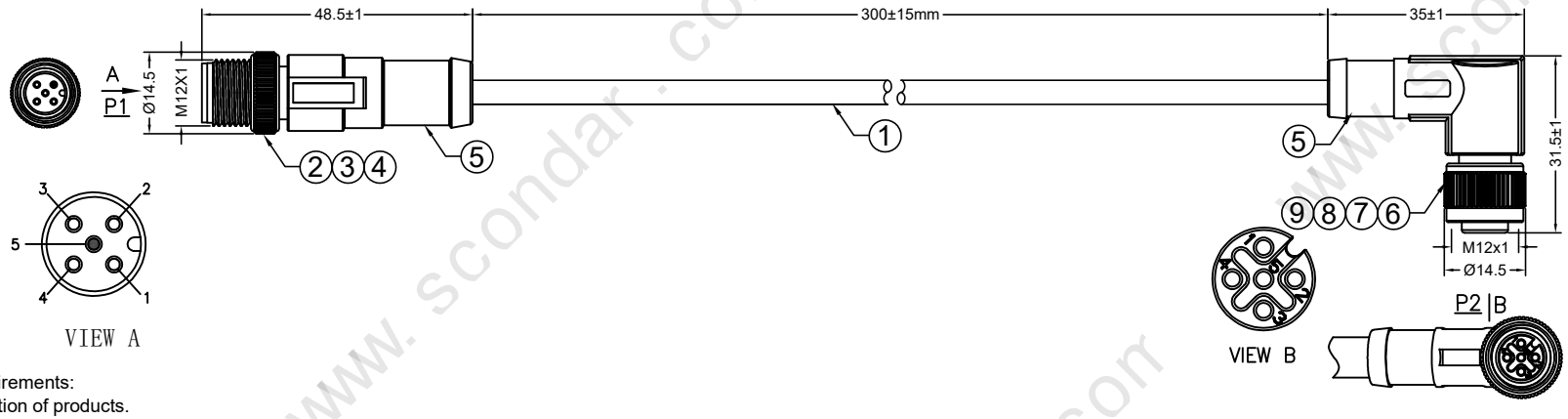

Technical requirements:
1.100% inspection of products.
2.High voltage test: DC 300V/0.01S
3.Insulation impedance: 10M Ω Min
4.Conductor impedance: 3 Ω Max
5.Short circuit test: 100% test
6.Compliant with ROHS requirements.

NO	PART NO	DESCRIPTION	UNIT	Q'TY	REMARK
9	Rubber Core	CAZN M12 5-Core Short Body Hole Type Rubber Core (semi-finished product)	PCS	1	
8	Rubber Ring	M12 Female Head Rubber Core Special O-ring Ø9xØ6x1.5	PCS	1	
7	S-07-SD-90	M12 shielding tube copper shell, bent formed short body shielding tube	PCS	1	
6	S-07-S3	M12 Female Plug, Connecting Nut, Shielded Type	PCS	1	
5	External Model	M12 Encapsulated Black TPU Molding	PCS	2	
4	Rubber Core	CAZN M12 5-Core Short Needle Type Rubber Core (semi-finished product)	PCS	1	
3	S-65-7.8	M12 Male and Female Shielding Tube (length) Outlet ID: 7.8mm	PCS	1	
2	S-06-S3	M12 Male Plug, Connecting Nut, Shielded Type	PCS	1	
1	1P22+1P24-002	UL20236 24AWG(19/0.127TC)*1P(Blue;White ID:1.4mm PE Material)+AL +22AWG (19/0.15TC) x1P(Red;Black ID:1.95mm PE Material)+D+B(19/0.15TC)+non-woven fabric 80℃ 300V PUR Jacket OD:6.7mm,Color: Purple	MM	300	

PIN ASSIGNMENT

P1	Color	P2
1	GND	1
2	Red	2
3	Black	3
4	White	4
5	Blue	5
Shell	Braid	Shell

Short Circuit

REVISIONS			
REV	DESCRIPTION	DATE	ECN NO.
A	INITIAL RELEASE	2026.07.15	

DATE	2026.07.15
DRAWN BY	Yao
CHECKED BY	Xiong
APPROVED BY	Lisa

SCONDAR ELECTRONIC LIMITED

TOLERANCES: ±0.3mm		UNIT: mm	PAGE/ 1 of 1
SCT P/N	SCT-RW0018		Rev A
CUSTOMER P/N			
CUSTOMER	Robot Wiring Wire Harness		

TITLE: M12 5Pin A code Male Plug 180° To M12 5Pin A code Female Plug 90° UL20236 24AWGx1P+22AWGx1P Purple PUR Jacket OD:6.7mm L=300mm

www.scondar.com