RoHS

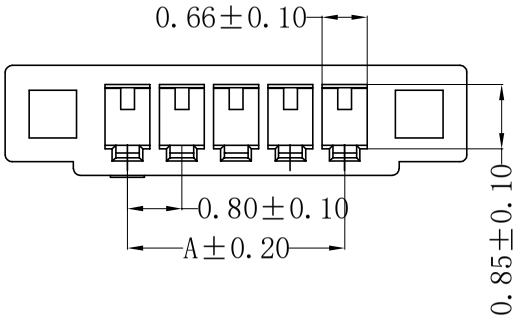

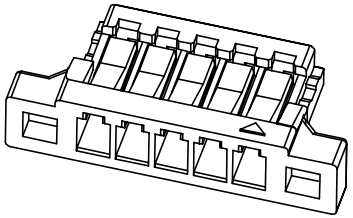

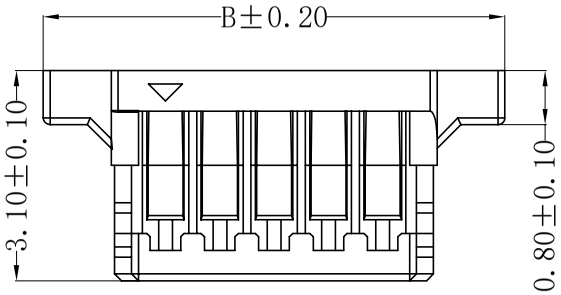

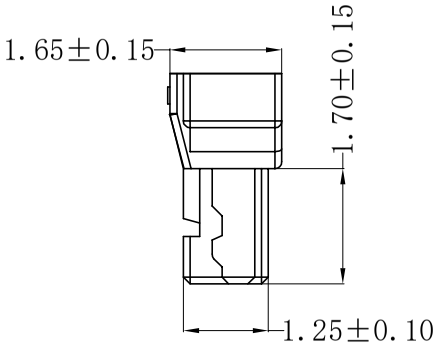

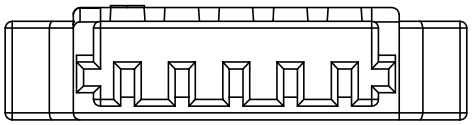

Specification:
-Current Rating: 0.5A AC/DC
-Voitage Rating: 30V AC/DC
-Insulation Resistance: 100MΩ Min
-Withstanding Voltage: 200VAC(1Min)
-Contact resistance: 20mΩ(Max).
-Operation Temperature: -25℃ to +85℃
Material:
-Insulator (Housing): LCP
-Color:Beige

Ordering Information

SCT0081H - xx F BE 110

- xx: No.of Pins See Table
- F: Insulation F=LCP
- BE: Color BE=Beige

Dimensions A	Dimensions B	Part NO	PIN
0.80	4.40	SCT0801H-02FBE110	2
1.60	5.20	SCT0801H-03FBE110	3
2.40	6.00	SCT0801H-04FBE110	4
3.20	6.80	SCT0801H-05FBE110	5
4.00	7.60	SCT0801H-06FBE110	6
4.80	8.40	SCT0801H-07FBE110	7
5.60	9.20	SCT0801H-08FBE110	8
6.40	10.00	SCT0801H-09FBE110	9
7.20	10.80	SCT0801H-10FBE110	10
8.00	11.60	SCT0801H-11FBE110	11
8.80	12.40	SCT0801H-12FBE110	12
9.60	13.20	SCT0801H-13FBE110	13
10.40	14.00	SCT0801H-14FBE110	14
11.20	14.80	SCT0801H-15FBE110	15
12.00	15.60	SCT0801H-16FBE110	16
12.80	16.40	SCT0801H-17FBE110	17
13.60	17.20	SCT0801H-18FBE110	18
14.40	18.00	SCT0801H-19FBE110	19
15.20	18.80	SCT0801H-20FBE110	20
16.00	19.60	SCT0801H-21FBE110	21
16.80	20.40	SCT0801H-22FBE110	22

深圳市森康达电子有限公司
工 程 专 用 章

受控

REV	DATE	MODIFICATION DESCRIPTION	CHANGE	APPROVE
A0	2016.06.06	NEW	———	———

OPERATION				
X.X	±0.30	DRAW	YANG	2016.06.06
X.XX	±0.20	DESIGN		
X.XXX	±0.10	CHECK	ZHONG	2016.06.06
Angle	±3°			
DIM	TOL	APPROVE	Lisa	2016.06.06

SCALE	——
UNIT	mm
SIZE	A4
SHEET	1/1
PROJ.	

SCONDAR ELECTRONIC LIMITED

Part No	SCT0801H-xxFBE110
TITLE:	0.80mm Pitch Wire to Board Housing xx Circuits LCP V0 Beige