RoHS

Recommended P.C.B Layout

General Tolerance±0.05

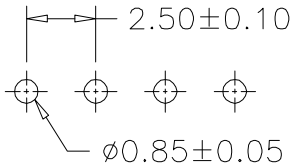

Specification:
- -Current Rating: 3A AC/DC
- -Voitage Rating: 250V AC/DC
- -Insulation Resistance: 1000MΩ Min
- -Withstanding Voltage: 1000VAC Min
- -Contact resistance: 20mΩ(Max).
- -Operation Temperature: -25℃ to +85℃

Material:
- -Insulator (Housing): PA66 (UL94V-0)
- -Contacts: Brass
- -Solder: Tin Plated
- -Color: Beige

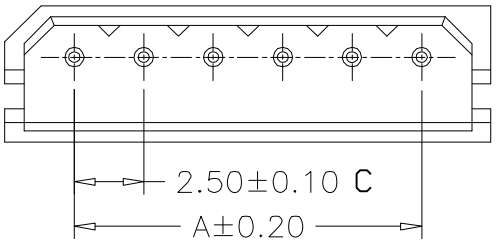

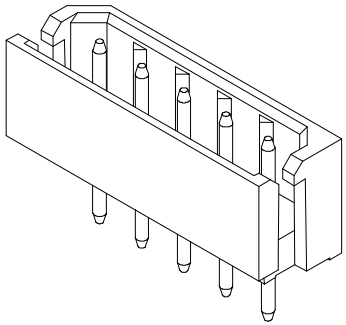

Ordering Information

SCT2513WV - ** B 0 BE 119

- ** : No.of Pins See Table
- B : Insulation B=PA66
- 0 : Package 0=PE Bag
- BE : Color BE=Beige

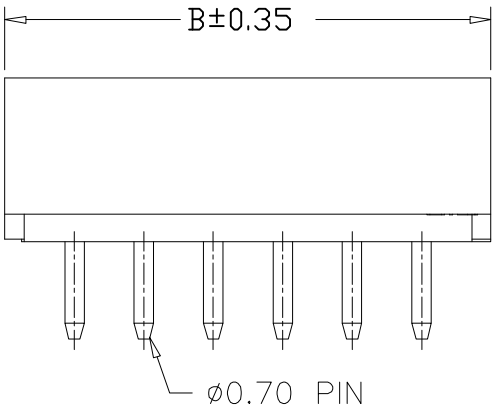

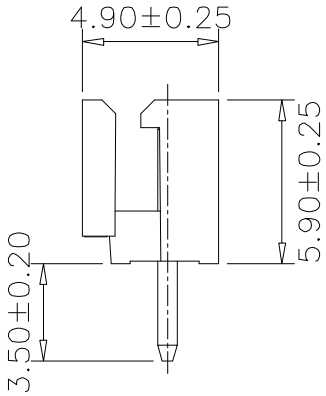

东莞市诚凯达电子科技有限公司
工程专用章

受控

Poles	A	B	Poles	A	B
	Dimensions			Dimensions	
10	22.50	27.50			
9	20.00	25.00			
8	17.50	22.50			
7	15.00	20.00	16	37.50	42.50
6	12.50	17.50	15	35.00	40.00
5	10.00	15.00	14	32.50	37.50
4	7.50	12.50	13	30.00	35.00
3	5.00	10.00	12	27.50	32.50
2	2.50	7.50	11	25.00	30.00

REV	DATE	MODIFICATION DESCRIPTION	CHANGE	APPROVE
A1	2021.07.09	Changed from SCT2513WV-xxP to SCT2513WV-xxB0BE119	———	———
A0	2006.05.02	NEW	———	———

OPERATION	
X.X	±0.35
X.XX	±0.25
X.XXX	±0.15
Angle	± 3°
DIM	TOL

DRAW	Peng	2021.07.09
DESIGN		
CHECK	Lisa	2021.07.09
APPROVE	Allen	2021.07.09

SCALE	—
UNIT	mm
SIZE	A4
SHEET	1/1
PROJ.	

SCONDAR

SCONDAR ELECTRONIC LIMITED

PART NO. SCT2513WV-xxB0BE119

TITLE: MX 2.50mm Pitch 180° Wafer Connector