RoHS

Recommended P.C.B Layout

General Tolerance±0.05

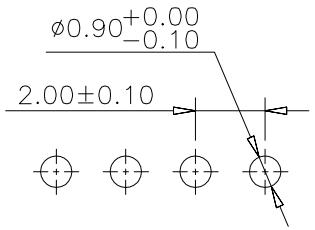

Specification:
- -Current Rating: 2A AC/DC
- -Voitage Rating: 125V AC/DC
- -Insulation Resistance: 1000MΩ Min
- -Withstanding Voltage: 800VAC(1Min)
- -Contact resistance: 20mΩ(Max).
- -Operation Temperature: -25℃ to +85℃

Material:
- -Insulator (Housing): Nylon 66 (UL94V-0)
- -Contacts:Brass Tin Plated
- -Color:Beige

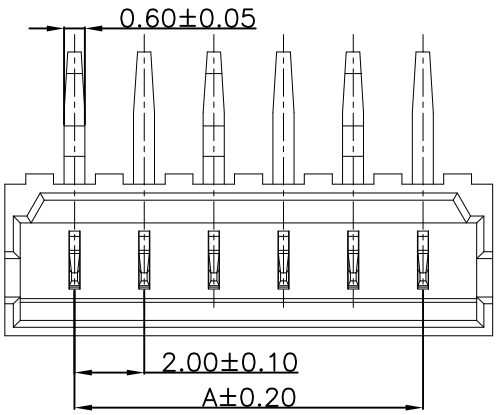

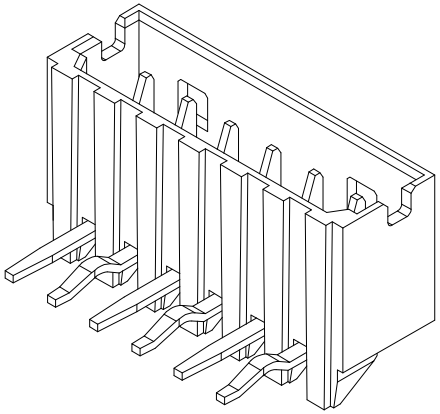

Ordering Information

SCT2002WR - ** B 2 BE 103

- ** : No.of Pins See Table
- B : Insulation B=PA66
- 2 : Package 2=Tube
- BE : Color BE=Beige

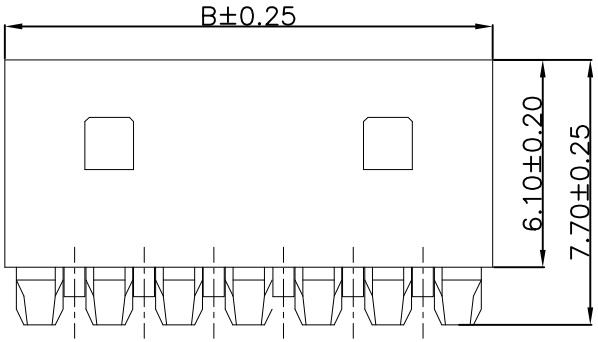

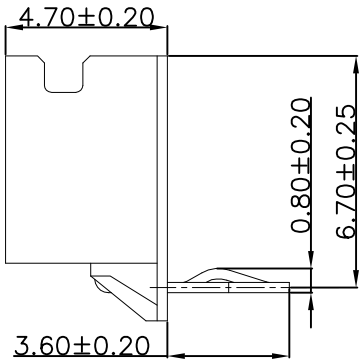

10	18.00	22.00			
9	16.00	20.00			
8	14.00	18.00			
7	12.00	16.00			
6	10.00	14.00	15	28.00	32.00
5	8.00	12.00	14	26.00	30.00
4	6.00	10.00	13	24.00	28.00
3	4.00	8.00	12	22.00	26.00
2	2.00	6.00	11	20.00	24.00
Poles	A	B	Poles	A	B
	Dimensions			Dimensions	

REV	DATE	MODIFICATION DESCRIPTION	CHANGE	APPROVE
A1	2021.07.10	Changed from SCT2002WR-XXP to SCT2002WR-xxB2BE103	———	———
A0	2010.05.15	NEW	———	———

OPERATION	
X.X	±0.35
X.XX	±0.25
X.XXX	±0.15
Angle	± 3°
DIM	TOL

DRAW	Peng	2021.07.10
DESIGN		
CHECK	Lisa	2021.07.10
APPROVE	Allen	2021.07.10

SCALE	
UNIT	mm
SIZE	A4
SHEET	1/1
PROJ.	

SCONDAR

SCONDAR ELECTRONIC LIMITED

PART NO.	SCT2002WR-xxB2BE103 A1
TITLE:	MX 2.00mm 90° Wafer