RoHS

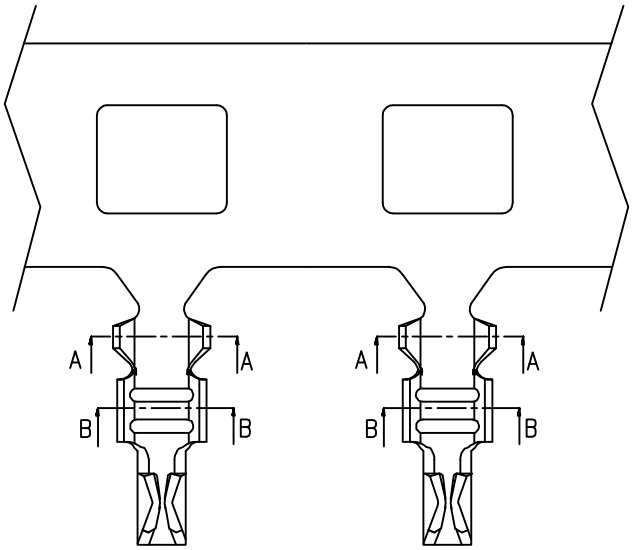

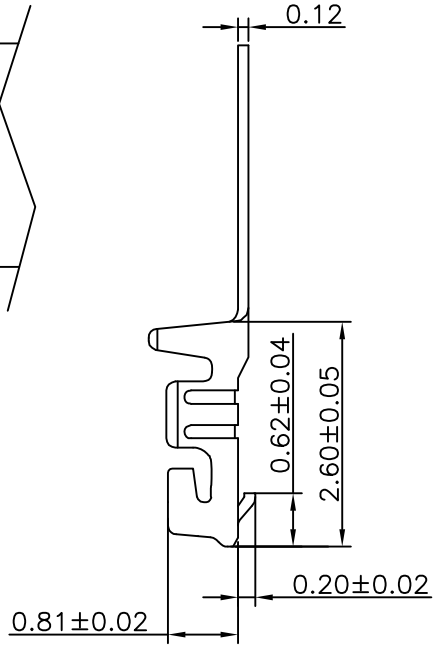

Specification:
-Current Rating: 0.5A AC/DC
-Voitage Rating: 30V AC/DC
-Insulation Resistance: 100MΩ(Min)
-Contact resistance: 20mΩ(Max).
-Withstanding Voltage:200VAC(Min)
-Operation Temperature: -25℃ to +85℃

Material:
-Applicable Wires: 30AWG~32AWG
-Material: Phosphor Bronze ,T=0.12mm
-Finish: Tin Plated

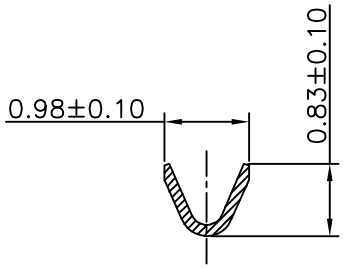

SECTION:B-B

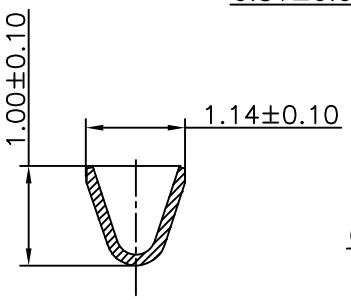

SECTION:A-A

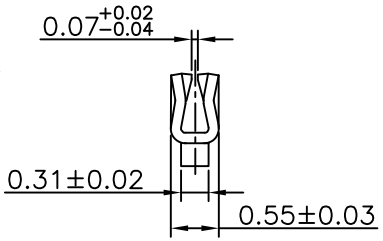

Ordering Information

SCT0801T P S 110

Material:
P=Phosphor Bronze

Contact Plated
S=Tin Plated

REV	DATE	MODIFICATION DESCRIPTION	CHANGE	APPROVE
A1	2021.07.05	Changed from SCT0801-TPB to SCT0801TPS110	———	———
A0	2009.03.03	NEW	———	———

OPERATION				
X.X	±0.35	DRAW	Peng	2021.07.05
X.XX	±0.25	DESIGN		
X.XXX	±0.15	CHECK	Lisa	2021.07.05
Angle	± 3°	APPROVE	Allen	2021.07.05
DIM	TOL			

SCALE	–
UNIT	mm
SIZE	A4
SHEET	1/1
PROJ.	

SCONDAR ELECTRONIC LIMITED

PART NO.	SCT0801TPS110
TITLE:	0.8mm Terminal