RoHS

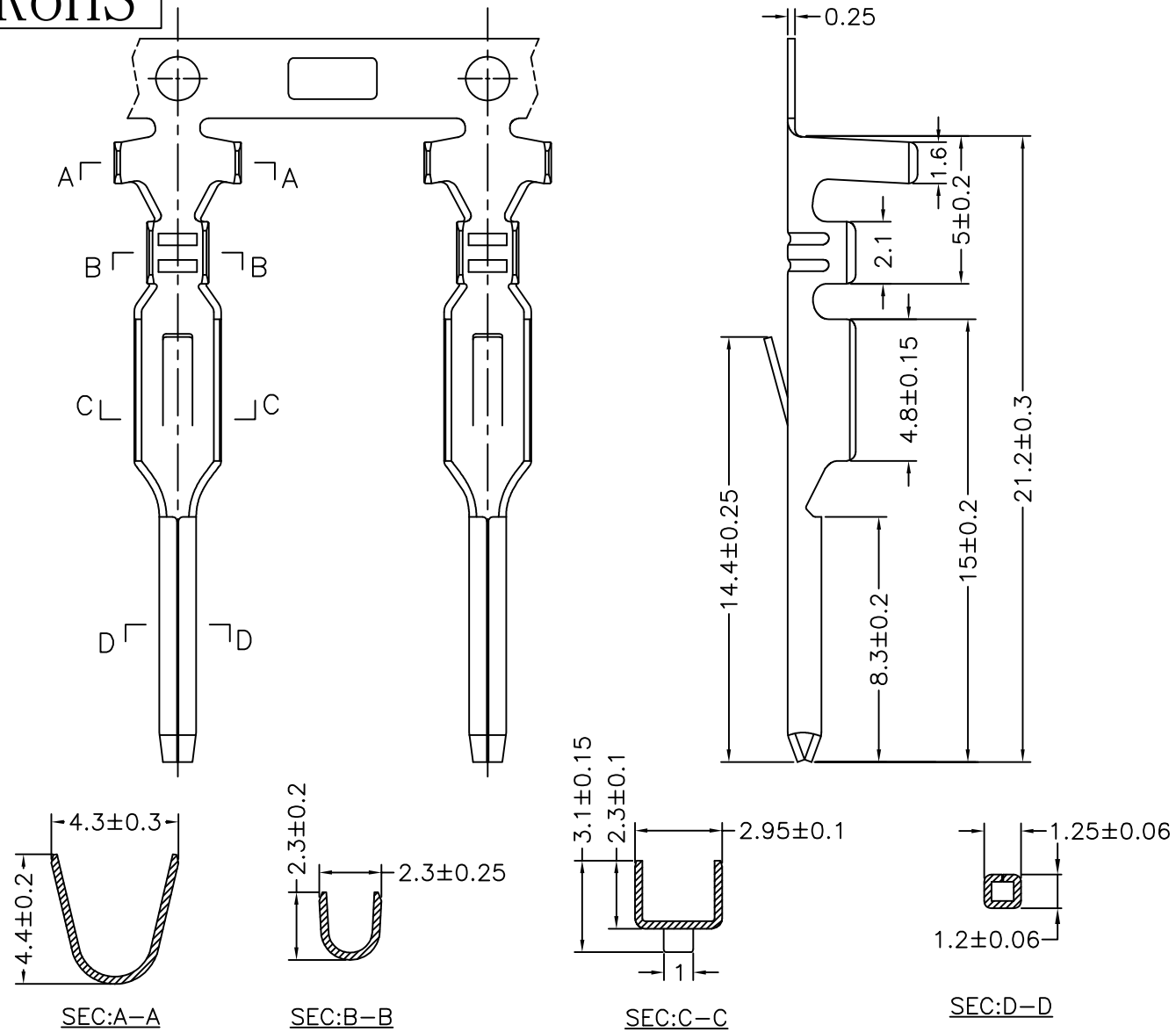

Specification:
-Current Rating: 7.5A AC/DC
-Voitage Rating: 250V AC/DC
-Insulation Resistance: 1000MΩ Min
-Withstanding Voltage: 1500VAC(1Min)
-Contact resistance: 20mΩ(Max).
-Operation Temperature: -25℃ to +85℃

Material:
-Material: Brass T=0.25mm
-Finish: Tin Plated
-Applicable Wires: 18AWG～22AWG

Ordering Information

SCT3961 MT B S 182

Material
B=Brass

Contact Plated
S=Tin Flash

					OPERATION		DRAW	Xiong	2022.07.06	SCALE	—	SCONDAR	
		SCONDAR ELECTRONIC, LTD ENGINEER 20240729			X.X	±0.35	DESIGN			UNIT	mm		SCONDAR ELECTRONIC LIMITED
					X.XX	±0.25				SIZE	A4		
A0	2022.07.06	NEW	——	——	X.XXX	±0.15	CHECK	Lisa	2022.07.08	SHEET	1/1	PART NO.	SCT3961MTBS190
					Angle	± 3°							
REV	DATE	MODIFICATION DESCRIPTION	CHANGE	APPROVE	DIM	TOL	APPROVE			PROJ.		TITLE:	VH 3.96mm Brass Tin Plated Male Terminal 18-22AWG MPQ=0.35KPcs/Reel