RoHS

受 控

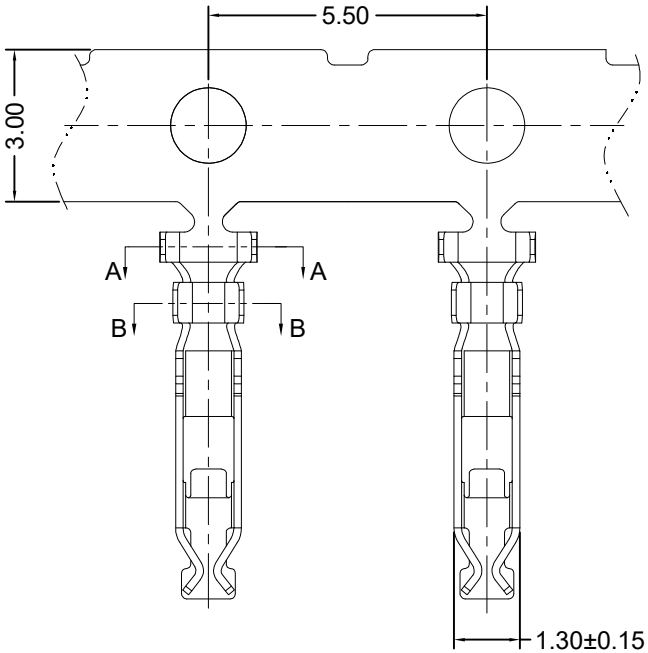

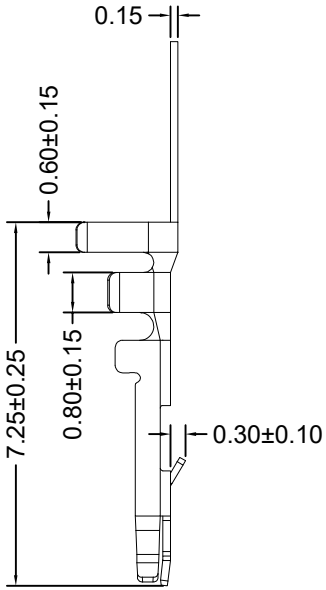

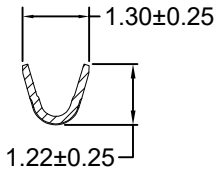

SEC:B-B

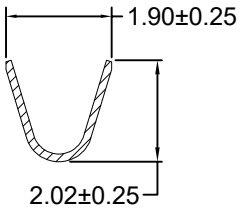

SEC:A-A

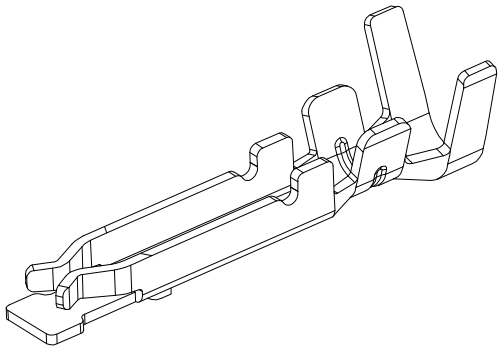

Specification:
-Voltage Rating:250V AC/DC
-Current Rating: 3A AC/DC
-Insulation Resistance: 1000MΩ Min
-Withstanding Voltage: 800VAC(1Min)
-Contact resistance: 20mΩ(Max).
-Operation Temperature: -25℃ to +85℃

Material:
-Material: Phosphor Bronze
-Finish: Tin Plated
-Applicable Wires: 28AWG～24AWG
-Terminal/Housing Retention Force:1.0kgf Min

Ordering Information

SCT3002FT P S 173-2.0

Material:
P=Phosphor Bronze

Contact Plated
S=Tin Plated
G=Gold Plated

					OPERATION		DRAW	Yao	2016.07.06	SCALE	—	SCONDAR	
		SCONDAR ELECTRONIC.LTD ENGINEER XJ2503			X.X	±0.30	DESIGN	Xiong	2016.07.06	UNIT	mm		
					X.XX	±0.20				SIZE	A4	SCONDAR ELECTRONIC LIMITED	
A0	2016.07.06	NEW	———	———	X.XXX	±0.10	CHECK	Lisa	2016.07.07	SHEET	1/1	Part No.	SCT3002FTPS173-2.0
					Angle	±3°							
REV	DATE	MODIFICATION DESCRIPTION	CHANGE	APPROVE	DIM	TOL	APPROVE			PROJ.		TITLE:	2.0mm for SCT3002MH/2.0 Crimp Terminal Phosphor Bronze Tin Plating Female Terminal 28-24AWG MPQ=15KPcs/Reel